Baumer
Passion for Sensors

Technical Data
VCXU.2-57M

Industrial Monochrome Matrix Camera, 5 Megapixel, USB 3.0
Article No. 11708186
Firmware Revision 4.1

Sensor Graph: Relative Response

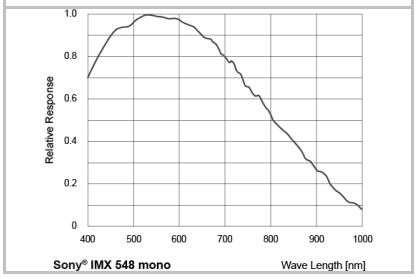

Digital Output: High Active

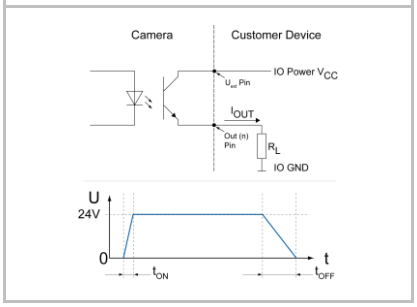

Device Information

Model Name	VCXU.2-57M
Vendor Name	Baumer

Sensor Information

Sensor Name	Sony IMX548 Gen4
Type	1/1.8″ progressive scan CMOS
Shutter	Global Shutter
Resolution	2464 x 2048 pixels
Scan Area	6.75 mm x 5.61 mm
Pixel Size	2.74 µm x 2.74 µm

Data Quality

@ 20 °C, gain = 1, exposure time = 4 msec

Dark Noise (σ)	2.5 e- typical
Saturation	9600 e- typical
Dynamic Range	70 dB typical
SNR	40 dB typical
Quantum efficiency η	70% @ 536 nm typical

Acquisition

Resolution	2464 px x 2048 px			
Interface Frame Rate (depends on used interface performance)	Format	Resolution		max. Frame Rate (@ Trigger Mode) [2]
	Full Frame	2464	x 2048	75 fps
	Binning 2x2	1232	x 1024	234 fps
	Binning 2x1	1232	x 2048	75 fps
	Binning 1x2	2464	x 1024	75 fps
Acquisition Frame Rate [1]	75 fps | $t_{readout}$ = 13.3 msec (max. Res. Full Frame) @ 10 bit 63 fps | $t_{readout}$ = 15.8 msec (max. Res. Full Frame) @ 12 bit 234 fps | $t_{readout}$ = 4.27 msec (max. Res. Binning 2x2) @ 10 bit 210 fps | $t_{readout}$ = 4.76 msec (max. Res. Binning 2x2) @ 12 bit			
Pixel Formats	Mono8, Mono10, Mono12, Mono12p			
Partial Scan	True Partial Scan with increasing Frame Rate on Y direction, Region of Interest (ROI) arbitrary Width: minimum 32, increment 32 Height: minimum 1, increment 1			
Adjustable Acquisition Frame Rate	Off or 0.01 … 65535 Hz			
Acquisition Mode	Continuous, Single Frame and Multi Frame			
Acquisition Status	AcquisitionActive, AcquisitionTrigger Wait			
Exposure Mode	Timed			
Shutter Mode	Global			
Readout Mode	Sequential			

Image Pre-Processing

Analog Controls	Exposure Time (1 µsec … 60 sec | Step Size 1 µsec) Gain (0…48 dB), Offset (0 ... 255 LSB | 12 bit)
Auto Function	ExposureAuto and GainAuto with BrightnessAutoPriority based on BrightnessAuto ROI
Gamma Correction	Gamma (0.1 … 2 | available if LUT is enabled)
LUT	Luminance (12 bit)
Color Models	Mono

[1] Sensor readout, different from pixel format

[2] depends on the used interface

Digital Output: Low Active

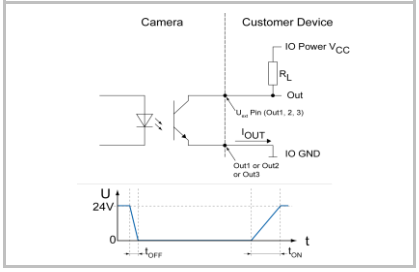

Digital Input

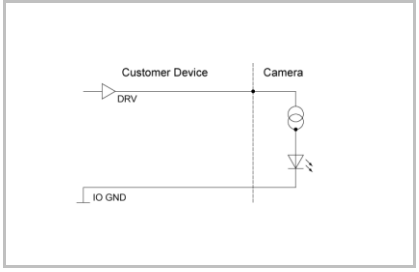

Trigger Mode: Start up time and valid Trigger

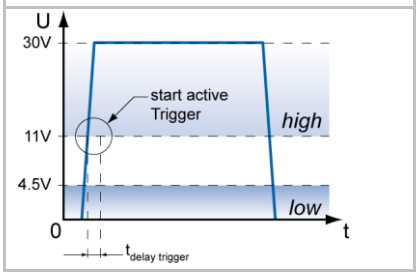

GPIO

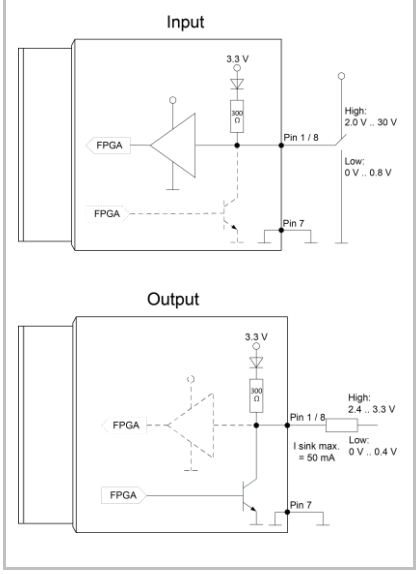

Image Pre-Processing

Color Processing	-
Color Enhancement	-
Color Tolerance	-
Binning Horizontal	1 or 2
Binning Vertical	1 or 2
Defect Pixel Correction	yes, static DPC: Defect Pixel List with up to 512 Pixel Coordinates
Image Flipping	Horizontal, vertical
Fix Pattern Noise Correction	-

Process Synchronization

Trigger Mode	Off (Free Running), On (Trigger)
Trigger Overlap Type	Readout
Trigger Sources	Hardware (Line0, 1, 2), Software, Counter 1, 2 End, All or Off fixed Trigger Delay out of $t_{readout}$: [1)] 93 µsec @ 8 bit 93 µsec @ 10 bit 93 µsec @ 12 bit max. Trigger Delay during $t_{readout}$: [1)] 93 µsec @ 8 bit 93 µsec @ 10 bit 93 µsec @ 12 bit
Trigger Delay	0 ... 2 sec, Tracking and buffering of up to 256 triggers
External Flash Sync	via Exposure Active $t_{delay\ flash} \leq 3$ µsec, $t_{duration} = t_{exposure}$
Encoder Function	yes, via Counter and Trigger Source
PTP Function	-

Digital I/Os

Lines	Input: Line 0, Output: Line3, GPIO: Line 1, Line 2
Line Sources (Output)	Off, ExposureActive, Timer1, ReadoutActive, UserOutput 1-3 and TriggerReady
Line Debouncer (Input)	Low and high signal separately selectable Debouncing Time 0 … 5 msec, Step Size: 1 µsec

Memory

Image Buffer	484 MB 67 Images (Trigger Mode) / 1 Image (Free Running Mode)
Non-volatile Memory	128 kb

Interface Data

Interface	USB3.0 (5000 Mbits/sec)
USB Vendor ID / Product ID	0x2825 / 0x0171

USB 3 Vision® Features

Events Transmission via Asynchronous Message Channel	DeviceTemperatureStatusChanged, EventLost, ExposureEnd, ExposureStart, FrameEnd, FrameStart, FrameTransferSkipped, Line0..2 FallingEdge, Line0..2 RisingEdge, TransferBufferFull, TransferBufferReady, TriggerOverlapped, TriggerReady, TriggerSkipped
Frame Counter	up to 2^{32}
Payload Size	0 … 10092768 Byte
Timestamp	64 bit, resolution in nsec, increment = 8
USB Vision	v1.0.1

[1)] Sensor readout, different from pixel format

Pin Assignment Data Interface

Pin Assignment Process Interface
(on camera side)

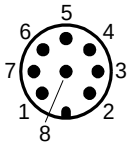

wire colors on connecting cables (ordered separately)			
1	White	5	Grey
2	Brown	6	Pink
3	Green	7	Blue
4	Yellow	8	Red

Device Temperature: T = Measurement Point

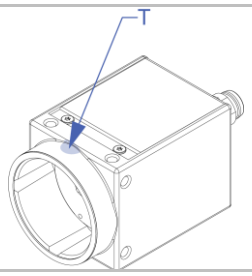

LED Signalling

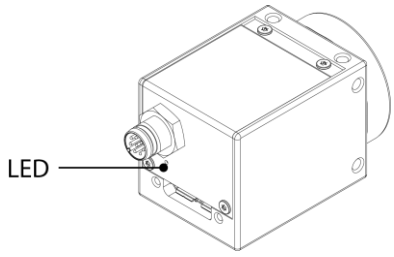

Interfaces and Connectors

Data and Power Interface	USB 3.0	Transfer Rate	5000 Mbits/sec
	USB 2.0	Transfer Rate	480 Mbits/sec
	Connector:	USB 3.0 Micro B	
	Pin Assignment:	1 - VBUS	2 - D-
		3 - D+	4 - ID
		5 - GND	6 - MicB_SSTX-
		7 - MicB_SSTX+	8 - GND_DRAIN
		9 - MicB_SSRX-	10 - MicB_SSRX+
Process Interface	Connector:	M8/8-pin (SACC-DSI-M8MS-8CON-M8-L180)	
	Assignment:	1 - GPIO (Line2)	2 - not connected
		3 - IN1 (Line0)	4 - GND IN1
		5 - Power VCC OUT1	6 - OUT1 (Line3)
		7 - GND GPIO	8 - GPIO (Line1)
Caution	* Note GPIOs: Ground loops are to be avoided and can lead to destruction of the device.		

Optical Data

Lens Mount	C-Mount
Optical Filter	-

Mechanical Data

Housing	Zinc die casting, baked varnish
Protection Class	IP40 (with mounted lens and USB 3.0 cable)
Weight	90 g
Dimensions	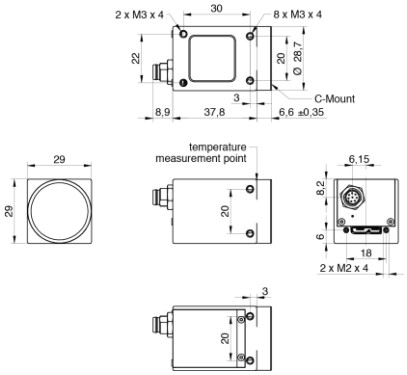
Additional Cooling Pipe	no

Environmental Data

Storage Temperature	-20 °C … + 70 °C
Operating Temperature *)	0 °C … +60 °C @ T = Measurement Point or 0 °C … +75 °C @ internal Temperature Sensor Note: Ambient temperature above 30 °C requires heat dissipation measures.
Int. Temperature Sensor	yes, InHouse: step size 1 °C, accuracy: ±0.5 °C (typ) 0 °C ... +85 °C
Humidity	10 % … 90 % non-condensing

*) the maximum temperature for Sony sensor characteristics (sensor performance) are guaranteed up to 47 °C @ Measurement Point or up to 58 °C @ internal temperature sensor

LED Signalling

LED	Green flash - Power on, no link active
	Green static - Link active USB 3.0
	Red static - Error or Link active USB 2.0
	Yellow static - Sensor Readout activity
	Red flash - Update

Electrical Data

Power Supply	bus powered via USB3.0 interface
Power Consumption	approx. 2.7 W @ 75 fps (Factory Setting “Default”)
Digital Input	Optocoupler $U_{IN(low)}$: 0.0 … 4.5 VDC $U_{IN(high)}$: 11.0 … 30.0 VDC I_{IN} : 3.0 … 10.0 mA min. Impulse Length: 2.0 µsec
Digital Output	Optocoupler U_{EXT}: 5 … 30 V DC I_{OUT}: max. 50 mA t_{ON} = typ. 3 µsec t_{OFF} = typ. 40 µsec
GPIO GPIO used as Input: GPIO used as Output: Caution	direct, without optocoupler $U_{IN(low)}$: 0.0 … 0.8 VDC $U_{IN(high)}$: 2.0 … 30.0 VDC min. Impulse Length: 2.0 µsec $U_{Out(low)}$: 0.0 … 0.4 VDC ($I_{sink\ max}$: 50 mA) $U_{Out(high)}$: 2.4 … 3.3VDC (I_{max} : 1 mA) * The General Purpose I/Os (GPIOs) are not potential-free and do not have an overrun cut-off. Incorrect wiring (overvoltage, undervoltage or voltage reversal) can lead to defects in the electronic system. Ground loops are to be avoided and can lead to destruction of the device.

Conformity

Conformity	CE, RoHS, REACH, UL Recognized
KC Registration No. / Date	- / -
MTBF	53 years @ T = 45 °C / 34 years @ T = 60 °C T = Measurement Point

GenICam™ Features

Short Exposure Range	yes, ShortExposureTimeEnable Short Exposure Range 1 ... 3 µsec - 10 µsec ... 60 sec Default Exposure Range 10 µsec … 60 sec
Timer	Timer Selector: Timer Selector: Timer 1 TimerTriggerSource: Line0, SoftwareTrigger, ExposureStart, ExposureEnd, FrameTransferSkipped, TriggerSkipped, Off TimerDelay: 0 µsec … 2 sec, Step Size: 1 µsec TimerDuration: 4 µsec … 2 sec, Step Size: 1 µsec
Counter	Counter Selector: Counter 1, Counter 2 CounterValue: 0 … 65535 Counter Event Source: Counter1End or Counter2End, ExposureActive, FrameTransferSkipped, FrameTrigger, TriggerSkipped, Line0..2 and Off Counter Reset Source: Counter1End, Counter2End, Line0..2 and Off
Sequencer	Sequencer Characteristics: up to 128 sets, up to 4 possible pathes for triggered set transitions, 6 trigger sources: Counter1End, Counter2End, ExposureActive, Line0..2, ReadoutActive, Timer1End Sequencer Parameters for Exposure, Gain, Trigger, ROI and Output: ExposureTime, CounterDuration, CounterEventActivation, CounterEventSource, CounterResetSource, ExposureMode, ExposureTime, Gain, Height, OffsetX, OffsetY, TriggerMode, UserOutputValue, UserOutputValueAll, Width

GenICam™ Features

User Sets	Factory Settings: Freely Programmable: Parameters:	UserSet0 (read only) UserSet1, UserSet2, UserSet3 any user definable Parameter
Acquisition Abort	Delay up to 15.8 msec	
Chunk Data	yes, Chunk Selector: Binning, BlackLevel, CounterValue, DeviceTemperature, ExposureTime, FrameID, Gain, Height, Image, ImageControl, LineStatusAll,OffsetX, OffsetY, PixelFormat, SequencerSetActive, Timestamp, Width	
Device Temperature	InHouse Event generation, if temperature status changed from Normal to High, High to Exceeded and Exceeded to Normal Exceeded (no image transfer) = max. internal temperature sensor + 1 °C	
Device Link Throughput Limit	yes, up to max. Device Link Speed	
Custom Data	yes, 128 Byte with CustomDataKonfiguration Mode	
Calibration Data	yes, camera calibration values can stored: CalibrationMatrix, CalibrationMatrixNew, CalibrationFocalLenght, CalibrationAngularAperture, GeometryDistortionValue: k1, k2, p1, p2, k3, CalibrationVector: tvec, rvec and CalibrationDataVersion	
Device Indicator Mode (LED)	Active (not switchable)	
SFNC Version	2.4.0	

Factory Settings after Start-Up

Trigger Mode	Off (Free Running)
Analog Controls	Exposure Time: 4 msec, Gain: 0 dB, Offset: 0
Pixel Format	Mono8
Partial Scan	Off
Acquisition Frame Rate	Off
Timer/Counter/Sequencer	Off
Defect Pixel Correction	On
Fixed Pattern Noise Correction	-
Digital Input	Line0, invert = false
Digital Output	Line3, invert = false, line source = Off
GPIO 1/2	Line1, Line2, invert = false, LineMode = Input
TriggerSource	All

Partial Scan @ FullFrame, min Exposure, Mono8 (monochrome camera) or BayerRG8 (color camera)

Resolution		max. fps acquisition	max. fps interface [2)]
Full HD	1920 x 1080	134	134
SXGA	1280 x 1024	141	141
HD720	1280 x 720	189	189
XGA	1024 x 768	179	179
SVGA	800 x 600	219	219
VGA	640 x 480	260	260
CIF	352 x 288	376	376
QVGA	320 x 240	422	422
QCIF	176 x 144	558	558
LineScan	2464 x 2048	75	75
	2464 x 1024	141	141
	2464 x 512	248	248
	2464 x 256	406	406
	2464 x 128	590	590
	2464 x 64	763	763
	2464 x 32	894	894
	2464 x 16	978	978
	2464 x 8	1027	1027
	2464 x 4	1027	1027
	2464 x 2	1027	1027
	2464 x 1	1027	1027

[2)] depends on the used interface